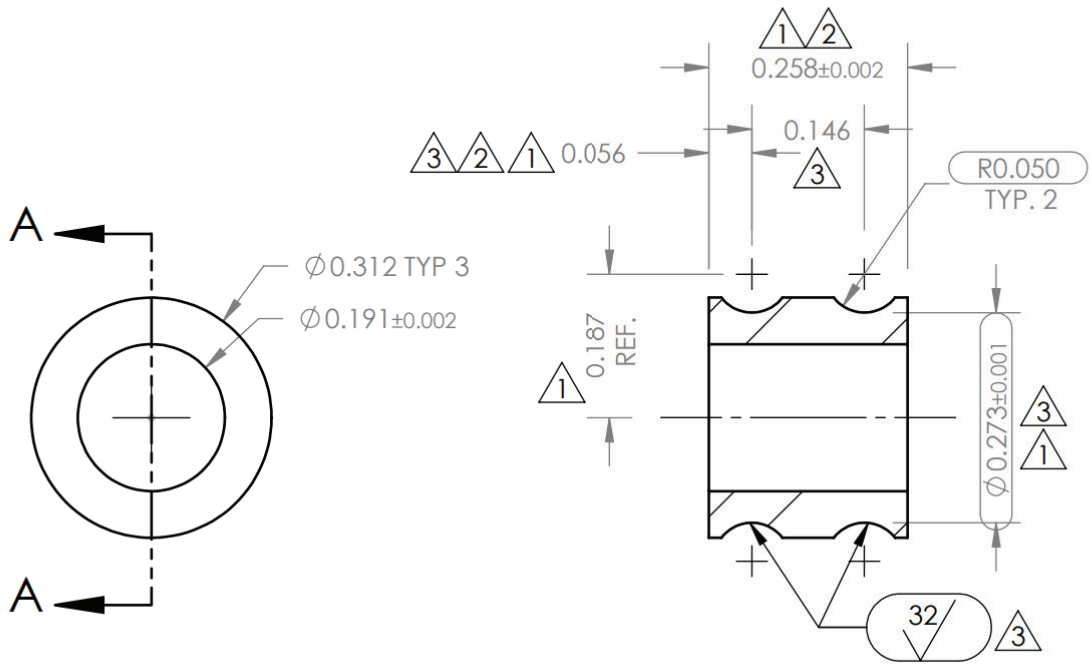

SECTION A-A

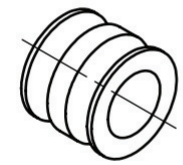

ISOMETRIC VIEW
SCALE 2:1

REV.	DATE	REVISION DESCRIPTION	BY	ENG APR	MFG APR	ECN #
3	10/8/2021	UPDATED SHEET FORMAT, FINISH WAS P&P, .273 +/-.001 WAS .274-.002, ADDED SURFACE FINISH SPEC, ADDED KPC, ADDED .146 DIM, 0.056 WAS REF	MDS	CJL	MKE	9728
2	7/2/2007	0.258±.002 WAS 0.262±.002; 0.056 REF. WAS 0.058 REF.	CDS	JDM	KEL	
1	5/25/2007	ADDED NOTE 2; ∅.274 -.002 WAS .270 -.002; .262±.002 WAS .246; .073 WAS .072; .058 REF WAS .051; .187 REF WAS .185 REF	CDS			

ACTUAL SIZE

DIMENSIONS IN OVALS ARE KEY PRODUCT CHARACTERISTICS

UNLESS OTHERWISE SPECIFIED:
- DIMENSIONS IN INCHES
- ALL DIMENSIONS PRIOR TO FINISHING
- REMOVE ALL BURRS AND BREAK SHARP EDGES WITH 0.010 MAX RADIUS OR CHAMFER

TOLERANCES UNLESS OTHERWISE SPECIFIED:
DECIMAL: ± .003
ANGULAR: ± 1 °
SURFACE FINISH: 63 ✓

INNER RACE
NARROW 16MM SHEAVE

MATERIAL: 304 SS
FINISH: PASSIVATE 3

DRAWING NUMBER	H-41356	REV.	3
PART #	MS-096		
SHEET NUMBER:	1/1	SCALE:	4:1
DESIGN BY :	JDM	DATE:	2/14/2006
DRAWN BY :	JDM	DATE:	2/14/2006
ENG. APR :		DATE:	
MFG. APR :	MKE	DATE:	10/11/2021